6. AT Control System

A: WIRING DIAGRAM

1. NON-TURBO MODEL

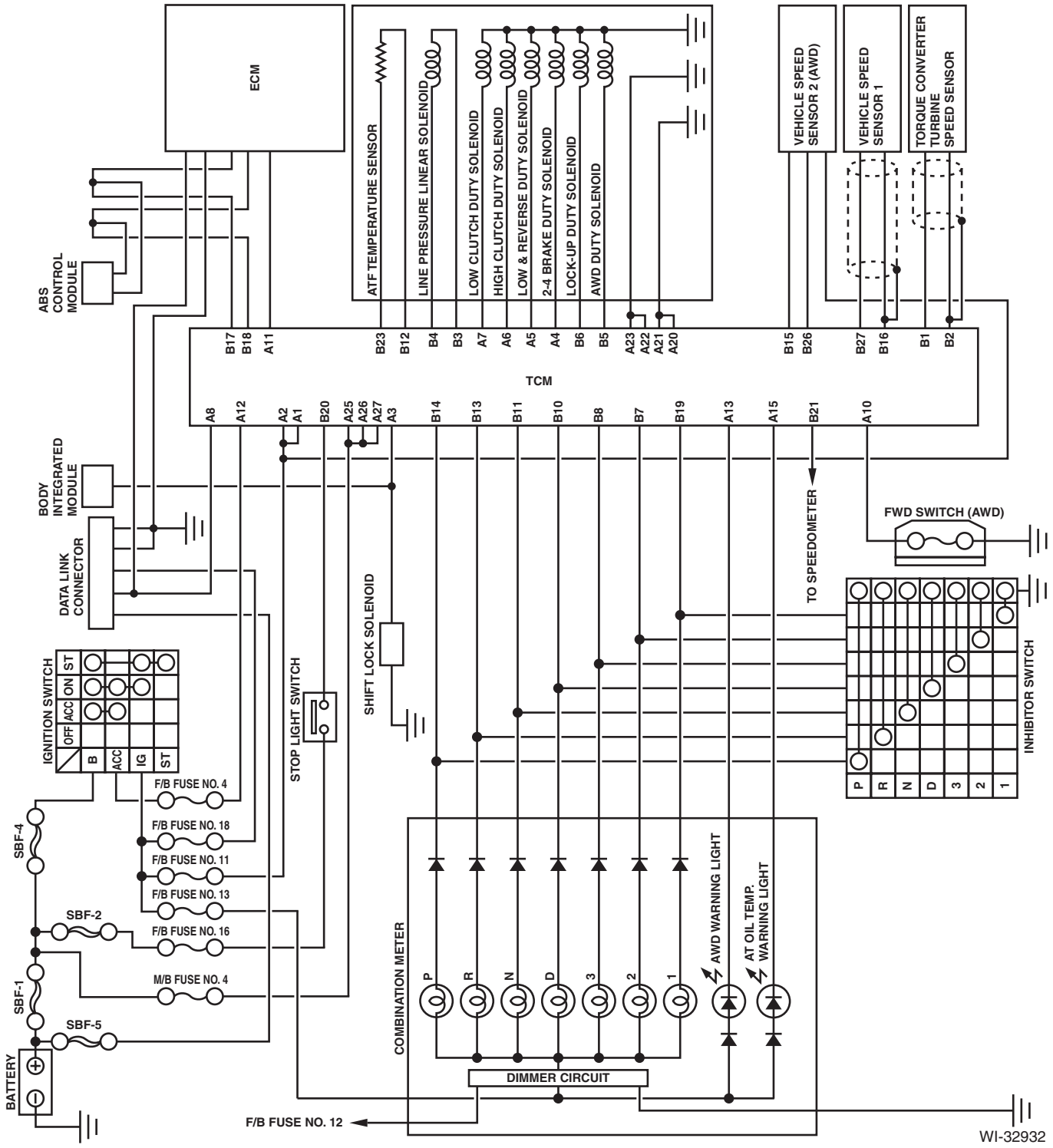

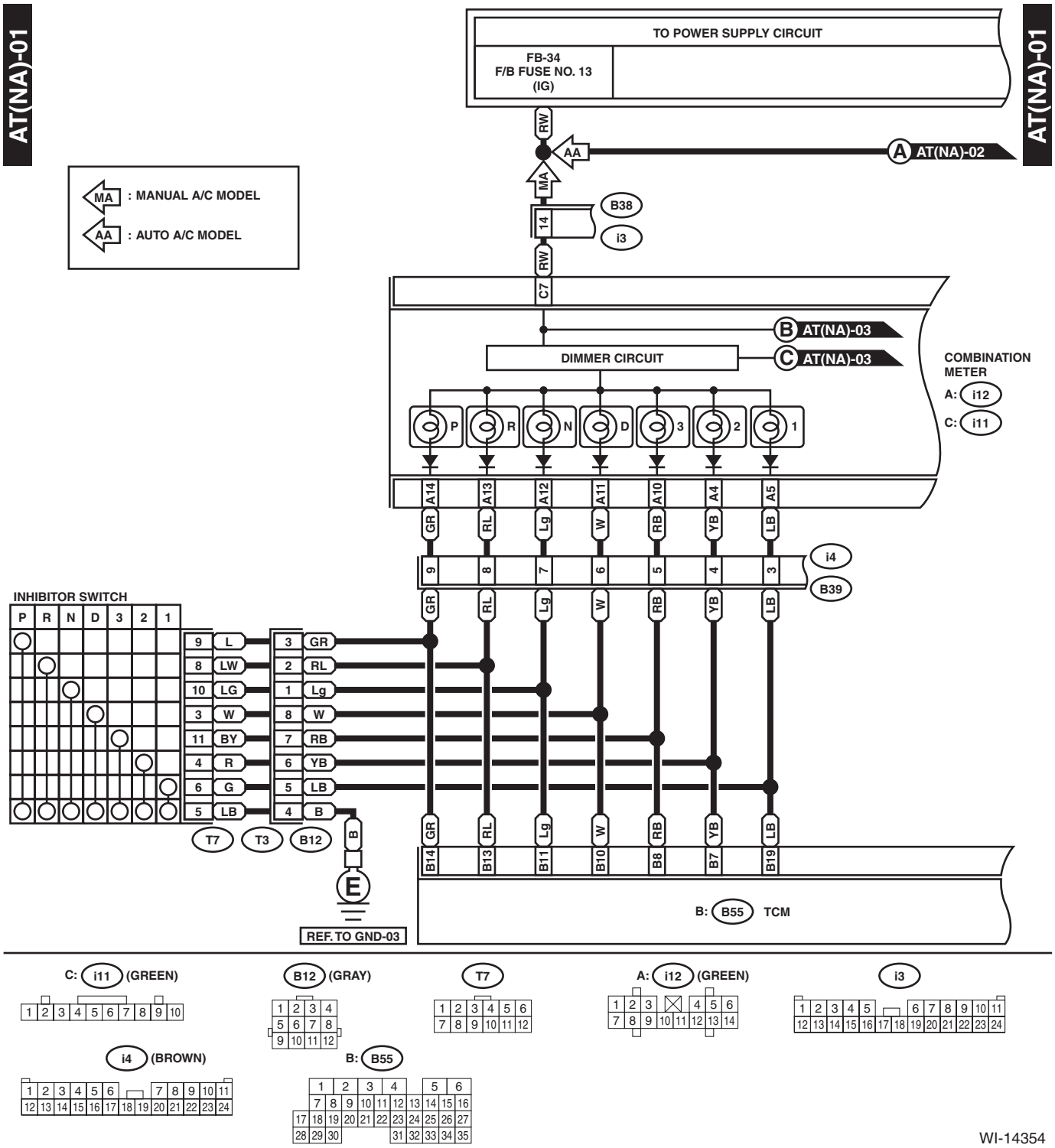
AT(NA)-01
TO POWER SUPPLY CIRCUIT
FB-34
F/B FUSE NO. 13
(IG)
RW
AA
A AT(NA)-02
MA
: MANUAL A/C MODEL
: AUTO A/C MODEL
B38
14
i3
RW
C7
B AT(NA)-03
DIMMER CIRCUIT
C AT(NA)-03
COMBINATION METER
A: i12
C: i11
P
R
N
D
3
2
1
A14
A13
A12
A11
A10
A4
A5
GR
RL
Lg
W
RB
YB
LB
i4
9
8
7
6
5
4
3
B39
INHIBITOR SWITCH
P R N D 3 2 1
9 L
8 LW
10 LG
3 W
11 BY
4 R
6 G
5 LB
3 GR
2 RL
1 Lg
8 W
7 RB
6 YB
5 LB
4 B
T7
T3
B12
B
E
REF. TO GND-03
B14
B13
B11
B10
B8
B7
B19
B: B55 TCM
C: i11 (GREEN)
B12 (GRAY)
T7
A: i12 (GREEN)
i3
i4 (BROWN)
B: B55

WI-14354

WIRING SYSTEM

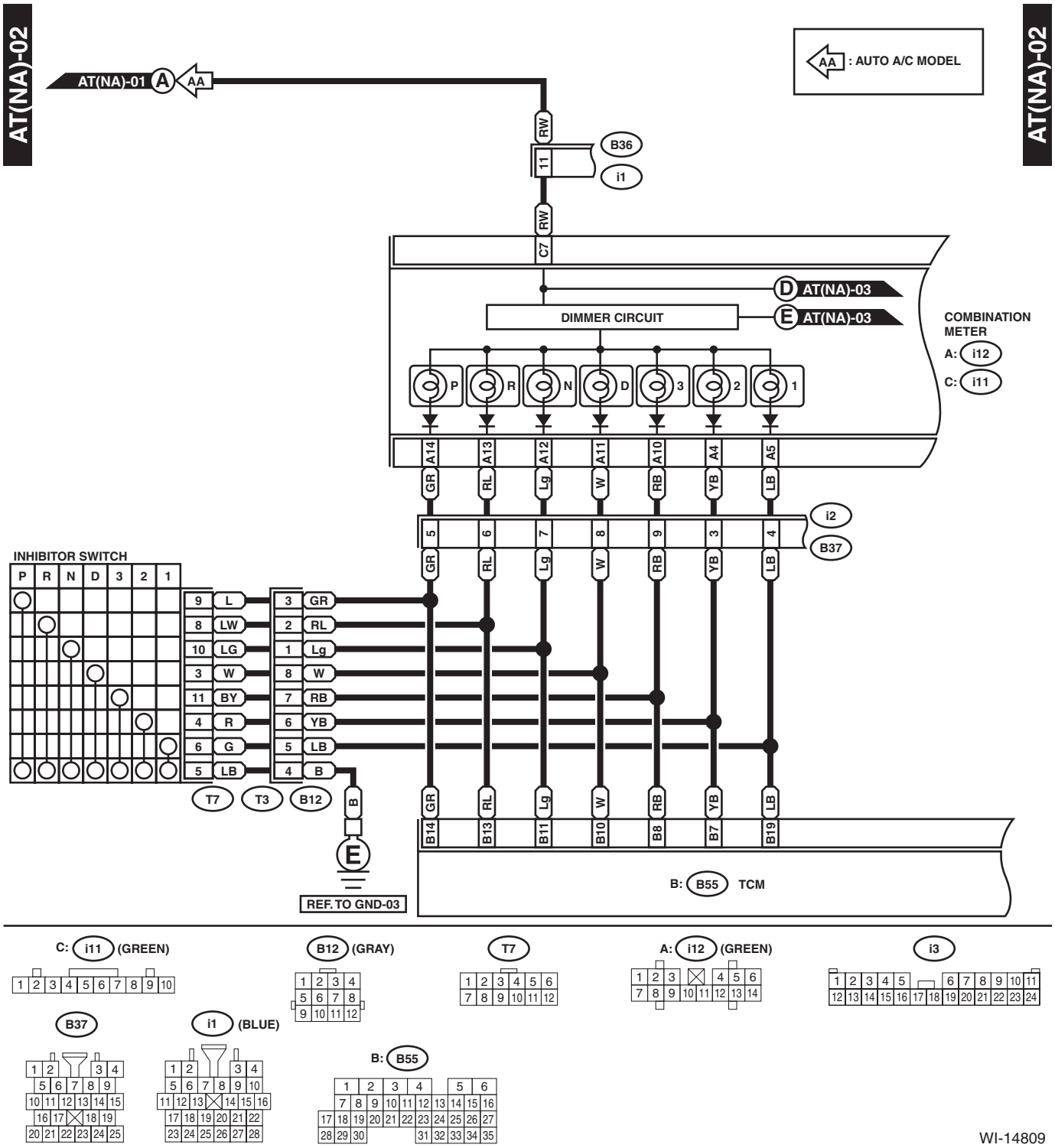

AT(NA)-03

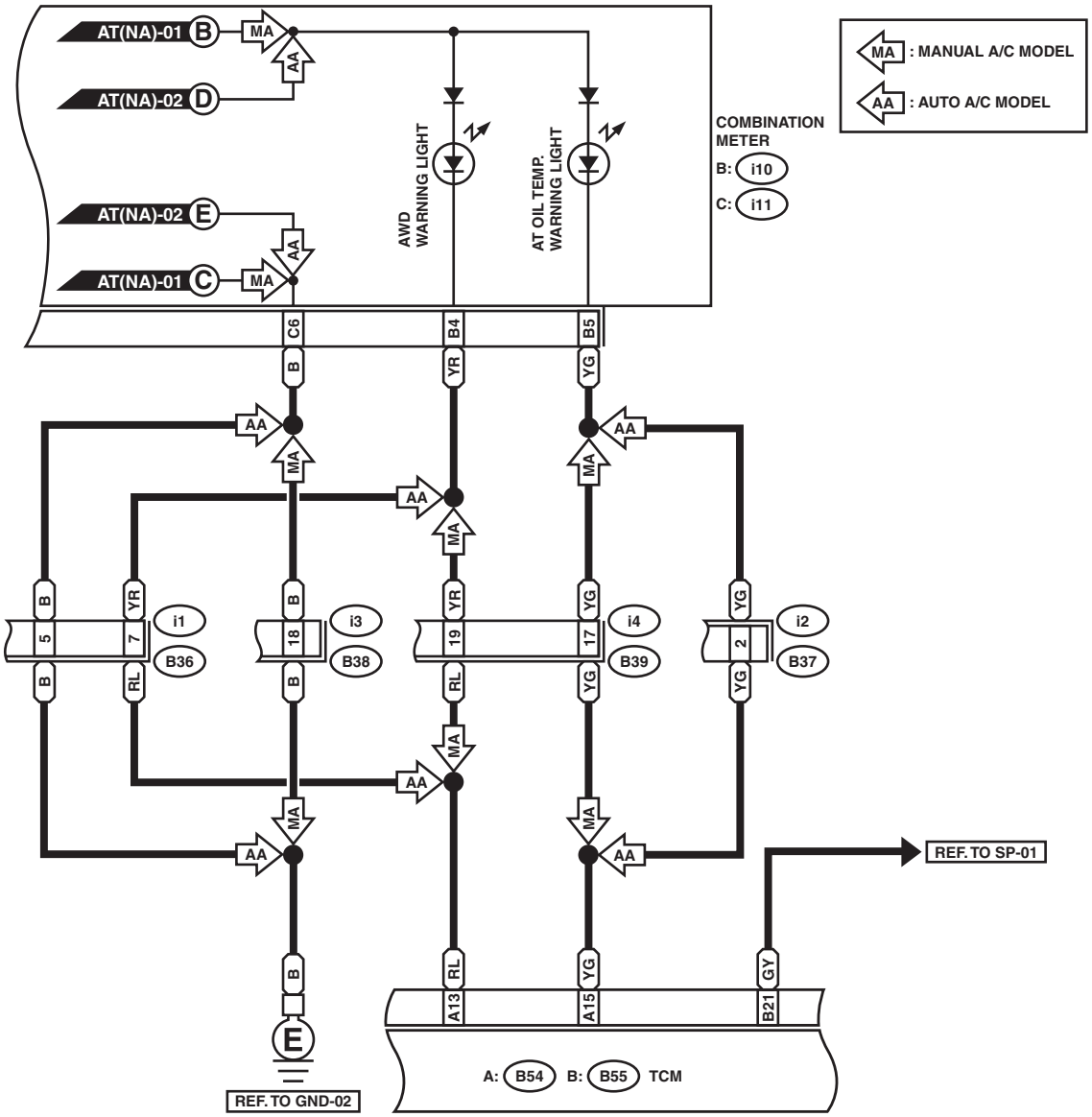

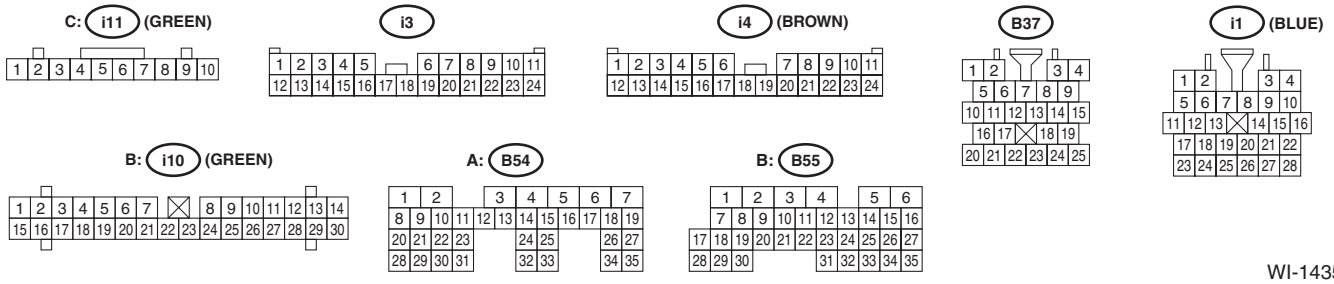

WI-14355

WIRING SYSTEM

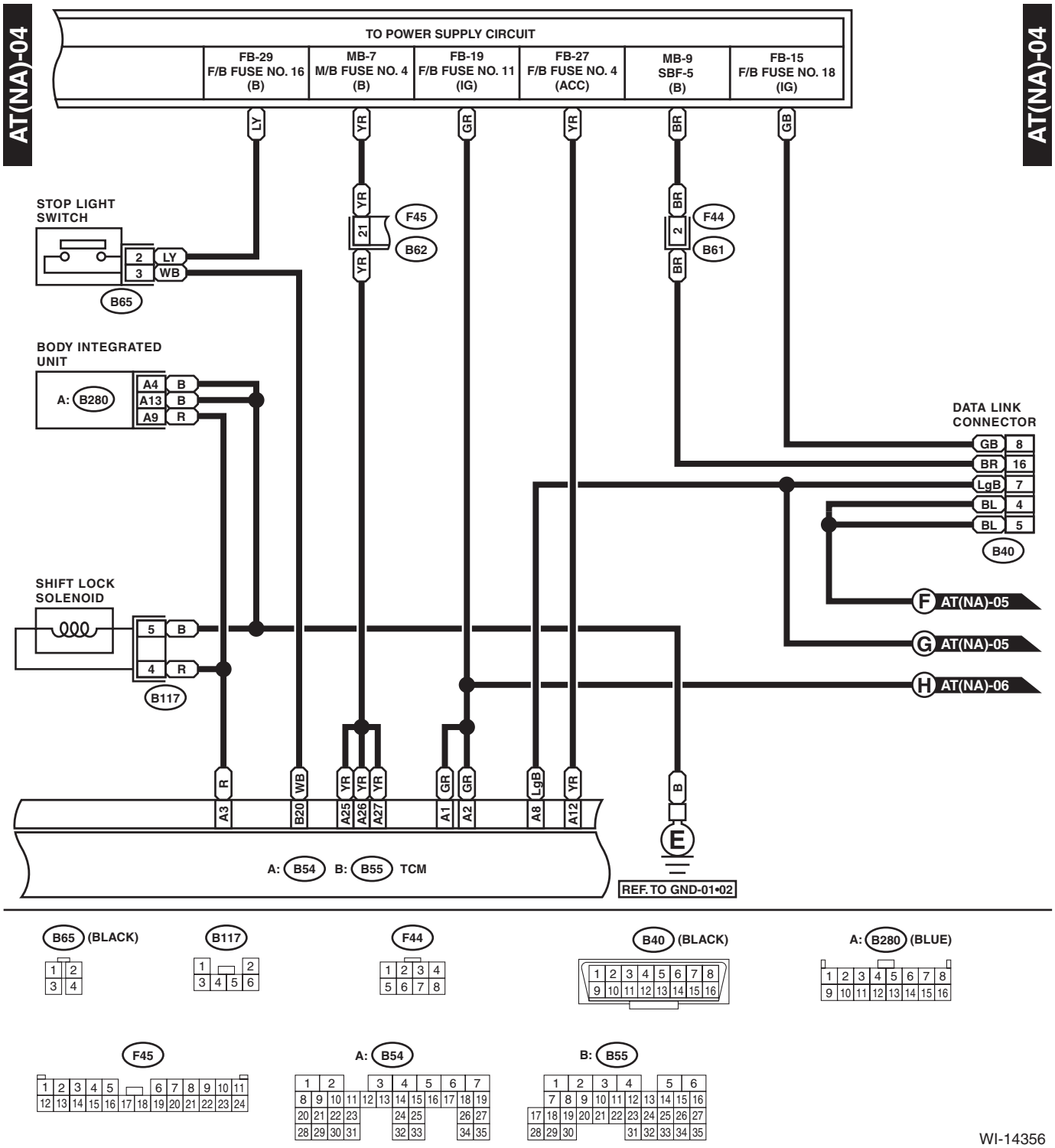

WI-14356

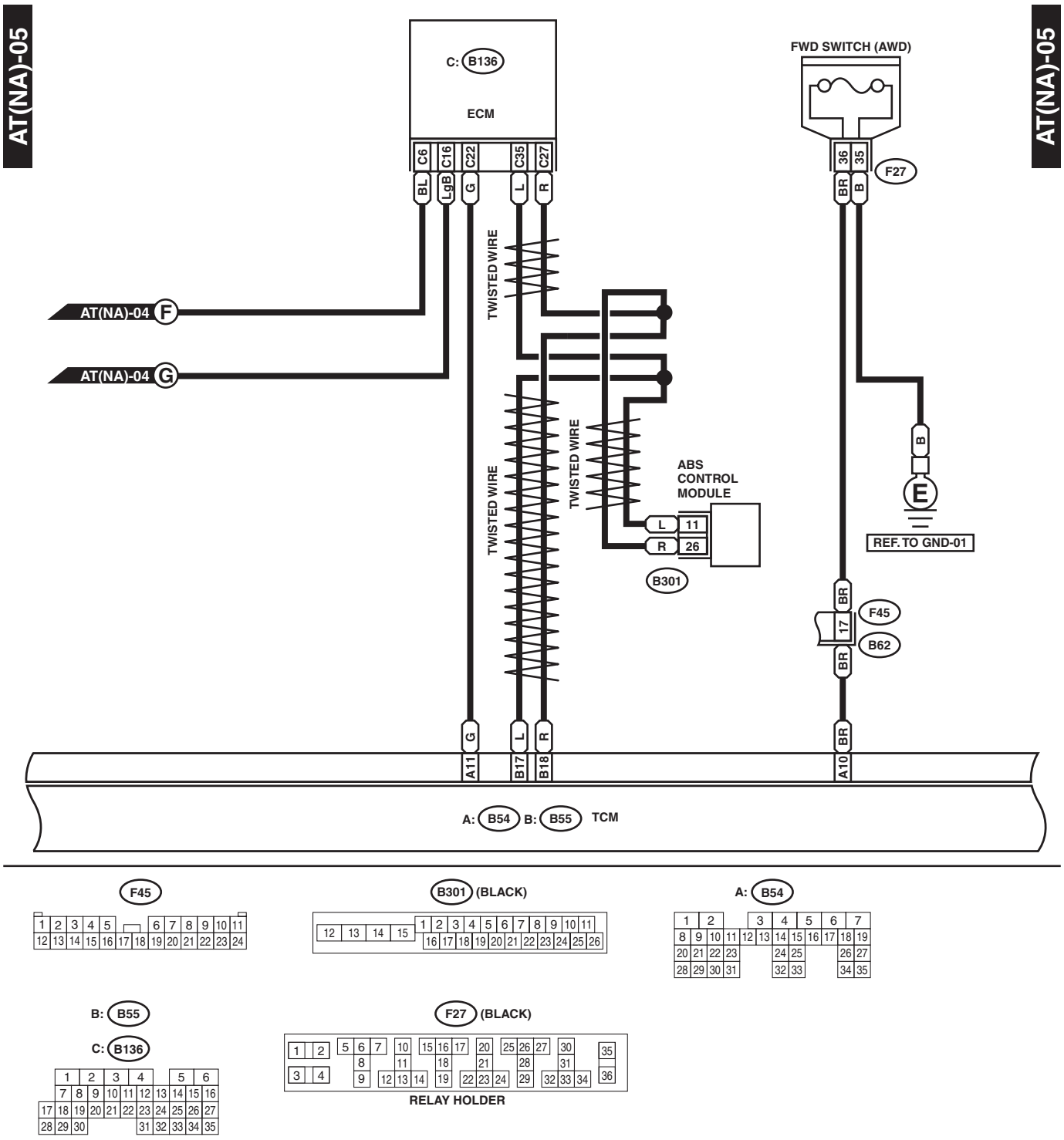
AT(NA)-05
AT(NA)-05
C: B136
ECM
C6
C16
C22
C35
C27
BL
LgB
G
L
R
FWD SWITCH (AWD)
36
35
F27
BR
B
AT(NA)-04 F
AT(NA)-04 G
TWISTED WIRE
TWISTED WIRE
TWISTED WIRE
ABS
CONTROL
MODULE
L
11
R
26
B301
B
E
REF. TO GND-01
BR
17
BR
F45
B62
G
L
R
BR
A11
B17
B18
A10
A: B54 B: B55 TCM
F45
B301 (BLACK)
A: B54
B: B55
C: B136
F27 (BLACK)
RELAY HOLDER
WI-22970

WIRING SYSTEM

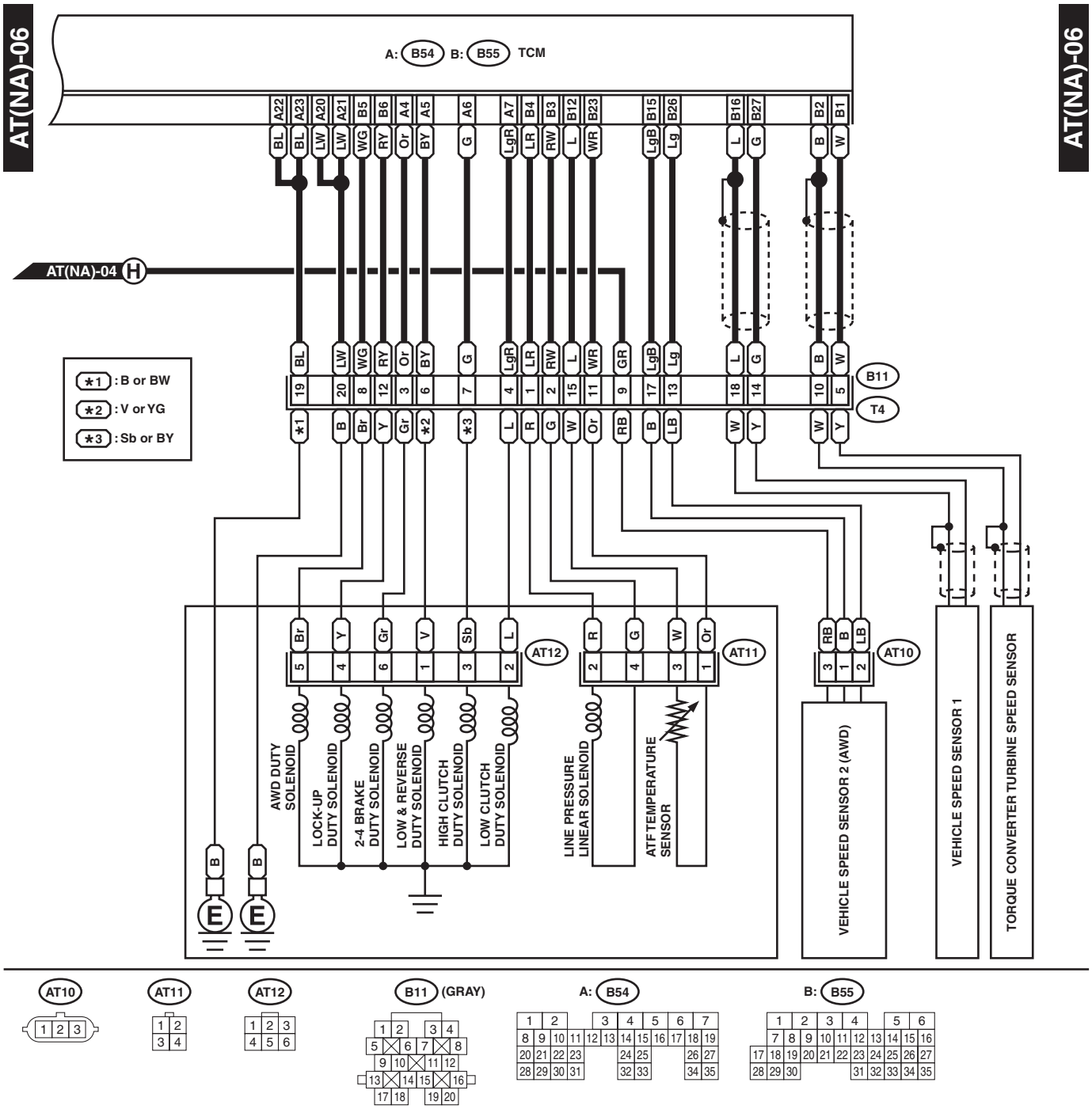

WI-14358

2. TURBO MODEL

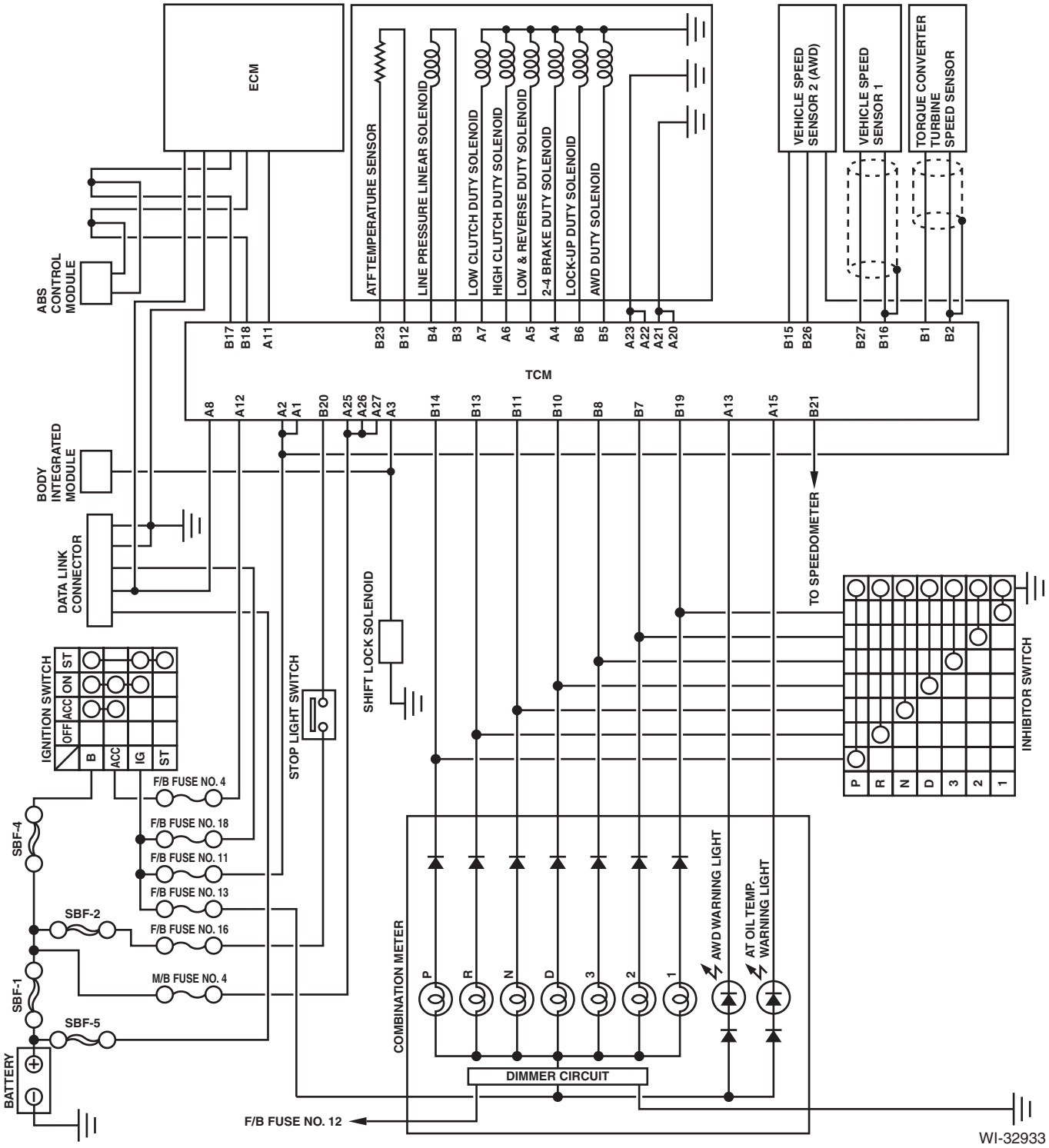

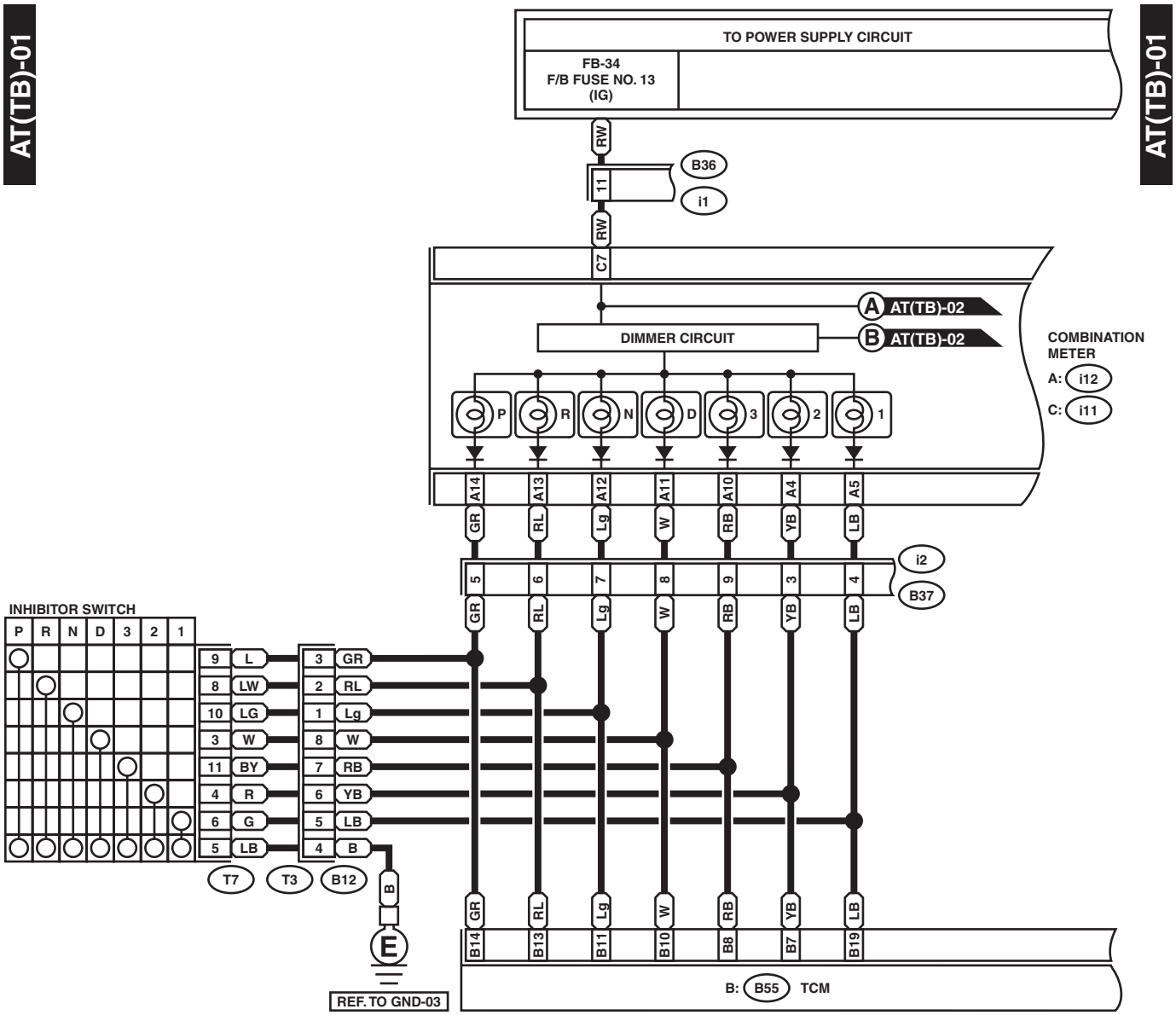
AT(TB)-01
TO POWER SUPPLY CIRCUIT
FB-34
F/B FUSE NO. 13
(IG)
RW
B36
11
i1
RW
C7
A AT(TB)-02
DIMMER CIRCUIT
B AT(TB)-02
COMBINATION METER
A: i12
C: i11
P
R
N
D
3
2
1
A14
A13
A12
A11
A10
A4
A5
GR
RL
Lg
W
RB
YB
LB
i2
5
6
7
8
9
3
4
B37
INHIBITOR SWITCH
9 L
8 LW
10 LG
3 W
11 BY
4 R
6 G
5 LB
3 GR
2 RL
1 Lg
8 W
7 RB
6 YB
5 LB
4 B
T7
T3
B12
B
E
REF. TO GND-03
B14
B13
B11
B10
B8
B7
B19
B: B55 TCM

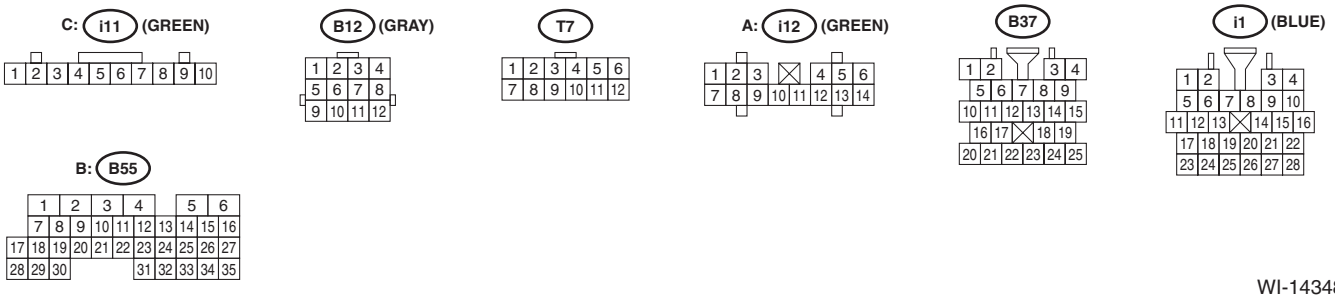
C: i11 (GREEN)
B12 (GRAY)
T7
A: i12 (GREEN)
B37
i1 (BLUE)
B: B55

WI-14348

AT(TB)-02

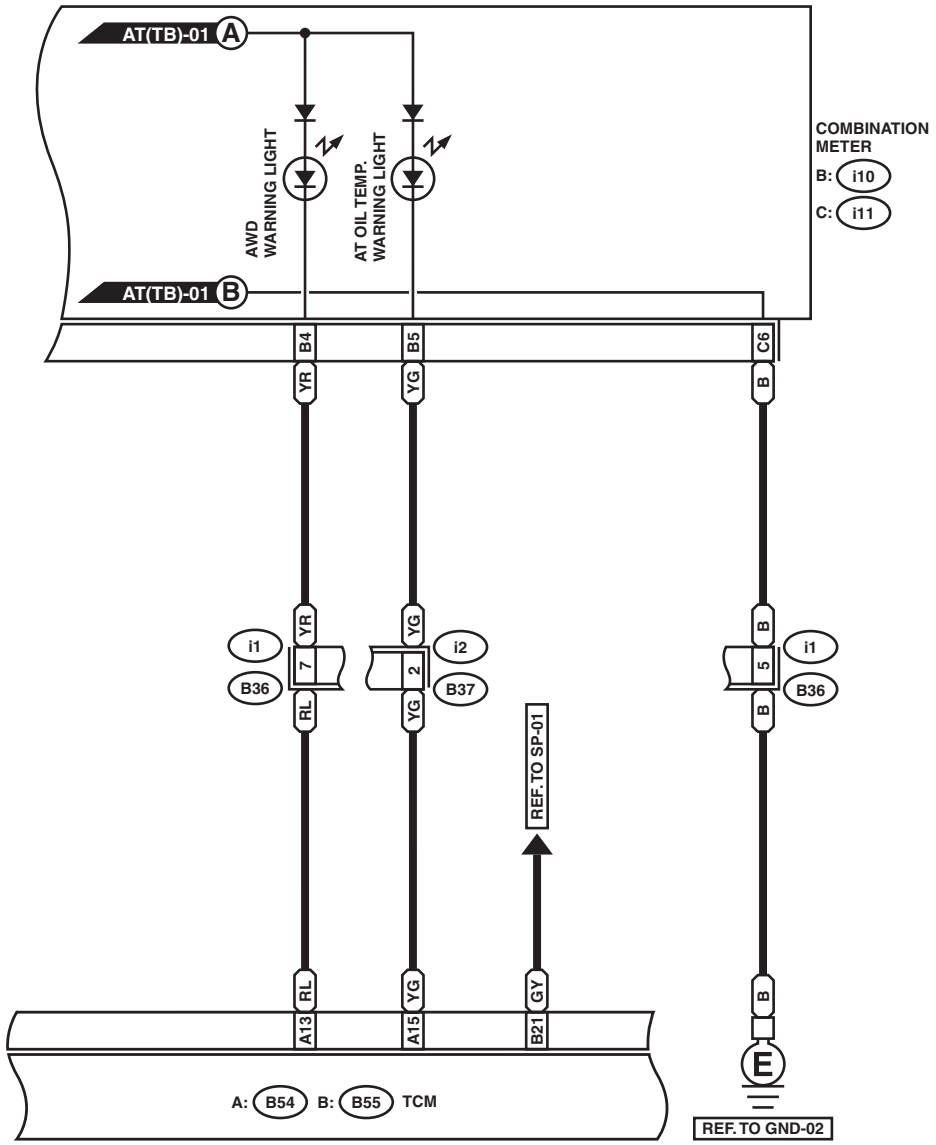

AT(TB)-02

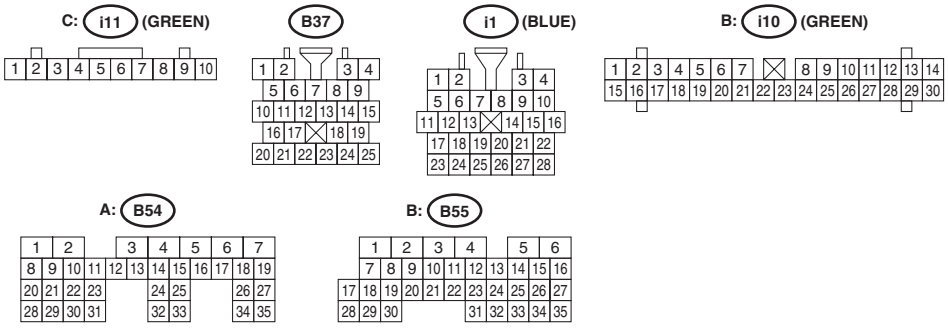

WI-14349

WIRING SYSTEM

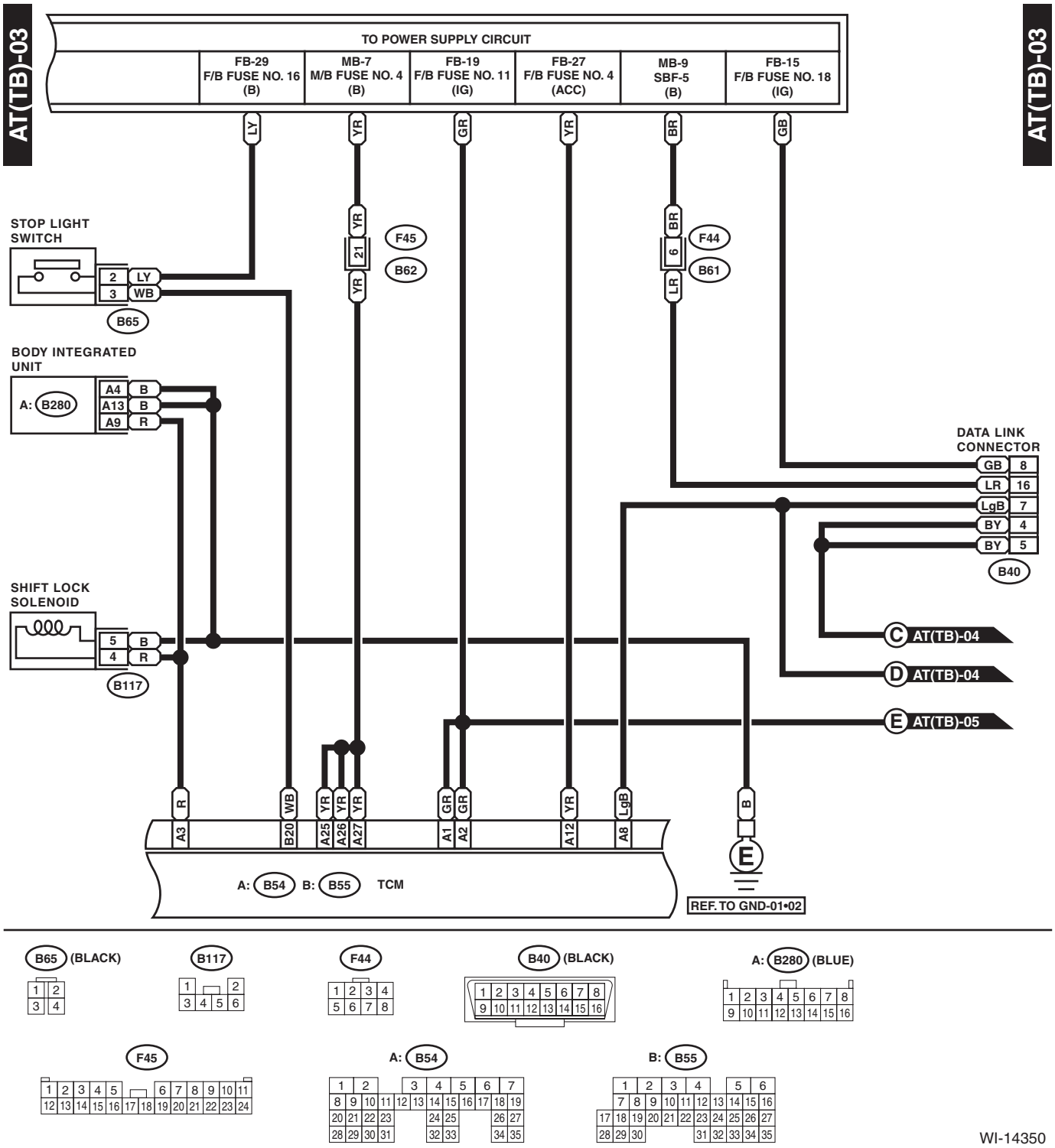

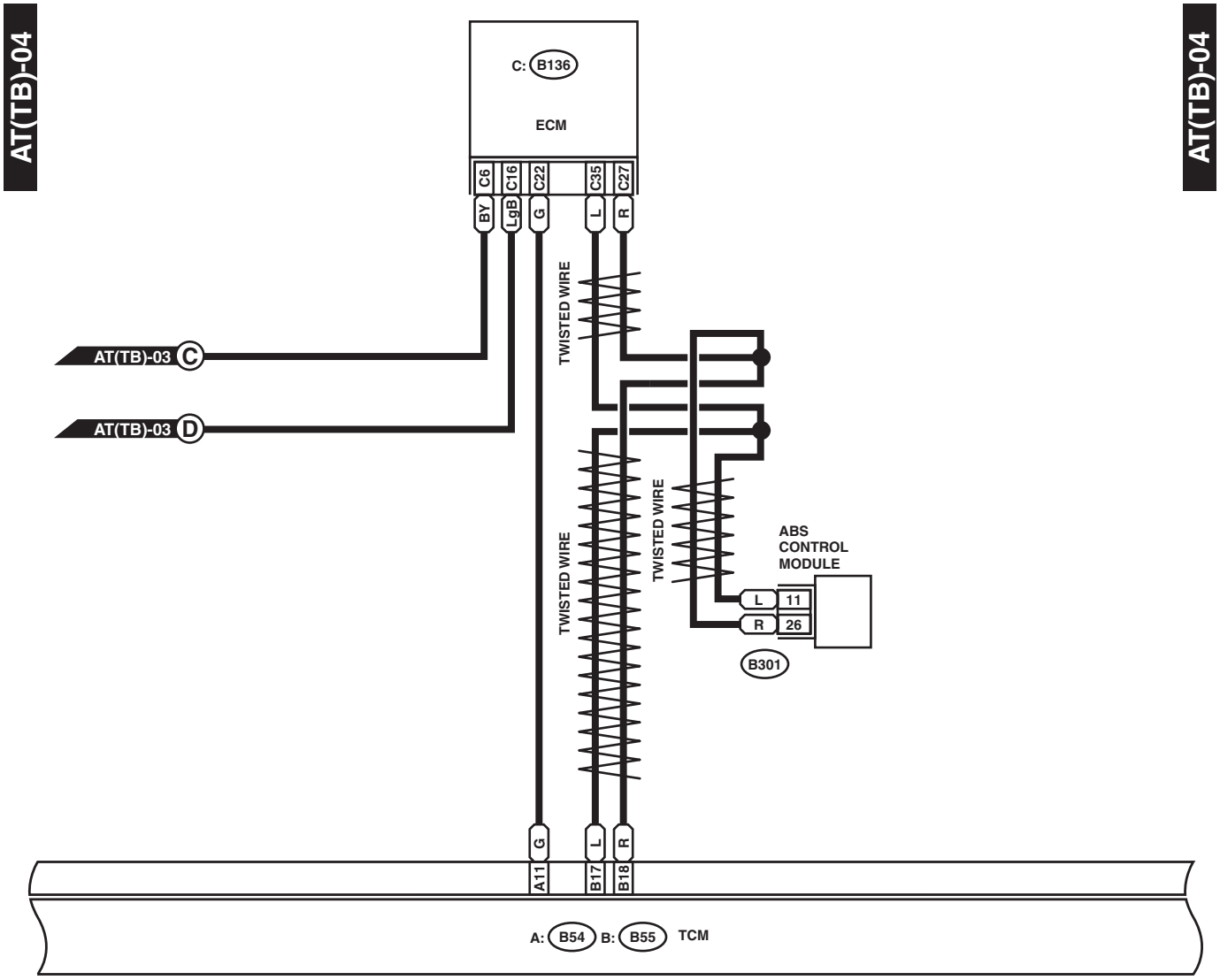
AT(TB)-04
AT(TB)-04
C: B136
ECM
C6
C16
C22
C35
C27
BY
LgB
G
L
R
TWISTED WIRE
AT(TB)-03 C
AT(TB)-03 D
TWISTED WIRE
TWISTED WIRE
ABS
CONTROL
MODULE
L 11
R 26
B301
G
L
R
A11
B17
B18
A: B54 B: B55 TCM

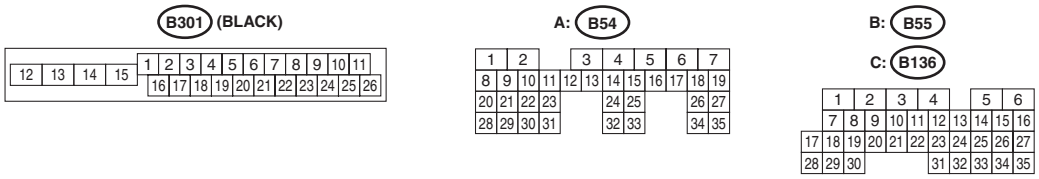
B301 (BLACK)
A: B54
B: B55
C: B136

WI-22971

WIRING SYSTEM

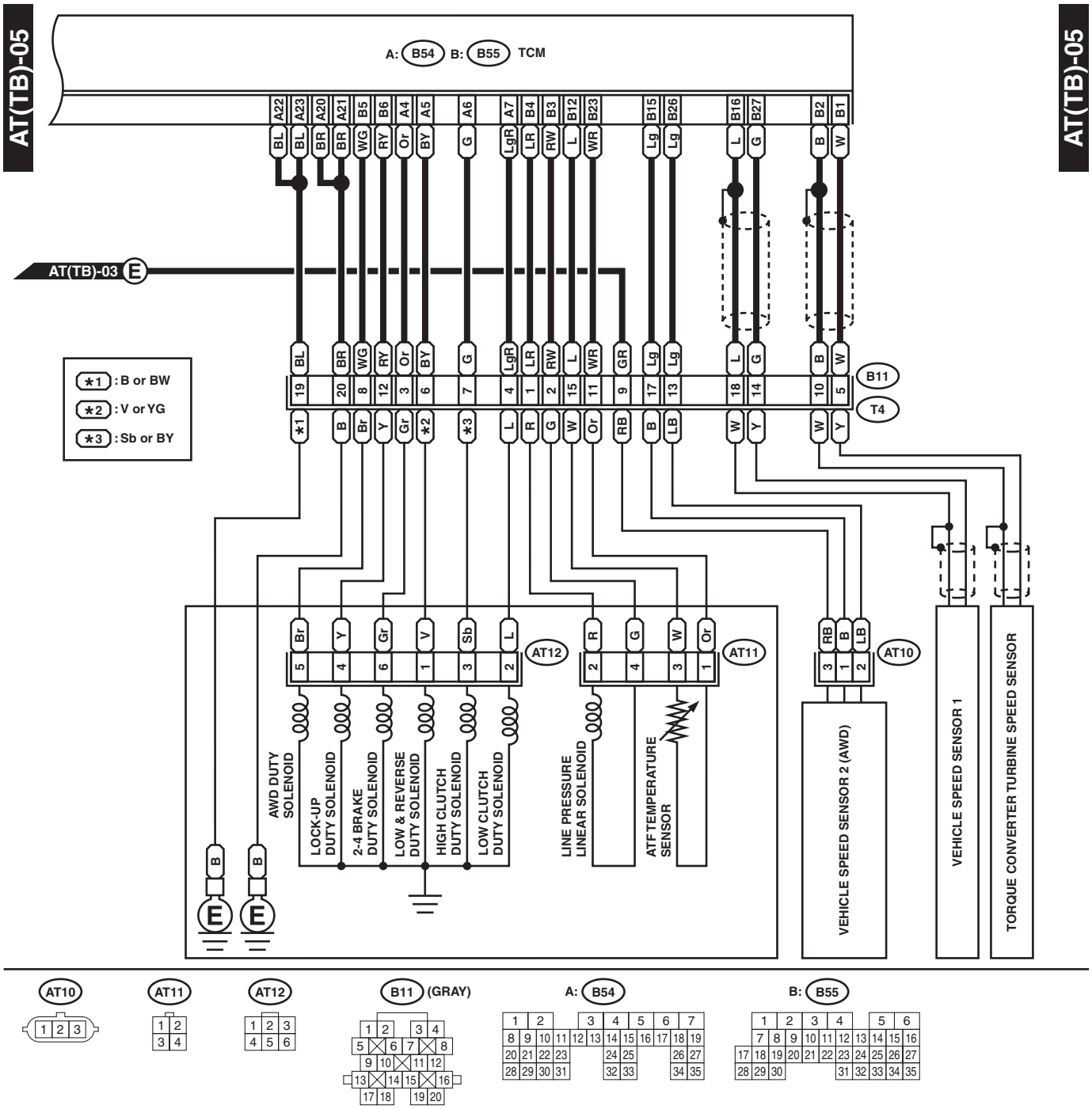

WI-14352